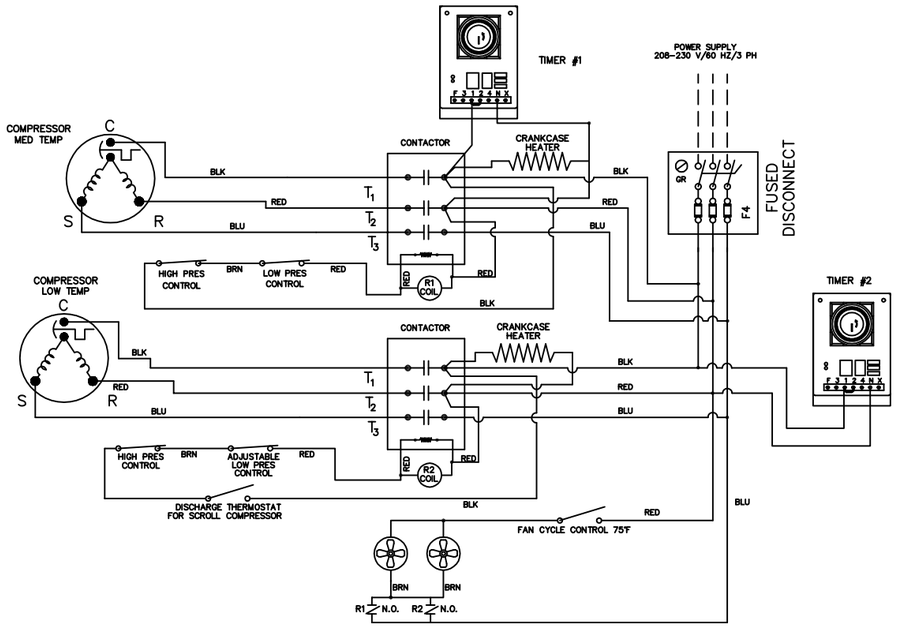

A R-1 TYPICAL CONDENSING UNIT WIRING DIAGRAM

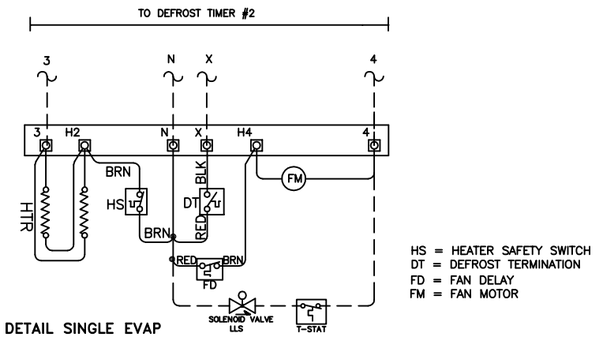

B R-1 DEFROST WIRING DETAIL SINGLE EVAP
208-230/60/1- V

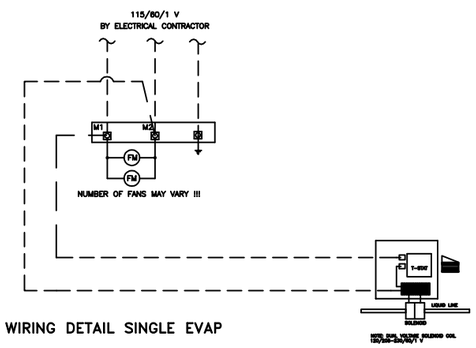

C R-1 AIR DEFROST WIRING DETAIL SINGLE EVAP
115/60/1 V

ROOM EVAPORATOR AND CONDENSATE DRAIN
TYPICAL INSTALLATION

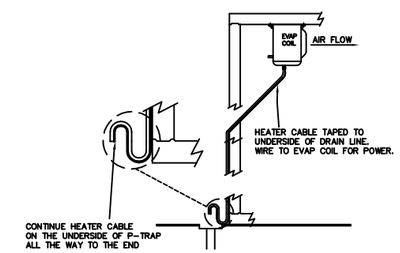

DRAIN LINE DETAIL
NOT TO SCALE

D R-1 TYPICAL EVAPORATOR AND
DRAIN LINE DETAIL

NOT FOR CONSTRUCTION!
PRINTS FOR APPROVAL ONLY!

THESE DRAWINGS ILLUSTRATE OUR UNDERSTANDING OF YOUR REQUESTS. THE DRAWINGS ARE SUBMITTED FOR YOUR VERIFICATION OF TYPE, QUANTITIES, SIZE, SPECIFICATION AND SUITABILITY FOR END USE.

APPROVAL OF THESE DRAWINGS CONSTITUTE ACCEPTANCE OF "AS DRAWN BY MASTER-BILT" TO YOUR REQUIREMENTS AND SPECIFICATIONS.

PLEASE SIGN ONE COPY AND RETURN.
PRODUCTION IS HELD FOR APPROVAL.

APPROVED BY: _____
(NAME AND TITLE)

_____
(COMPANY NAME & DATE)

NOTES: _____

REVISIONS:

#	DESCRIPTION	DATE	BY

Condensing Unit Specifications

Model	Compressor(s)	Compressors		Capacity (110ºF Condensing)		Weight	Ref.	Receiver Cap	Connections		HP
		RLA	LRA	-20º F sst	25º F sst			90%/90ºF (lbs)	Liquid	Suction	
RSPR1104C	RST45C1E-CAV	4.6	26.5		5530	184	R-404A	4.95	3/8	5/8	1/2
	CF06K6E-TF5	7	52	5190			R-404A	4.95	3/8	1-1/8	1 1/2

Evaporator Unit Specifications

Model	Qty	Weight	Dimensions			Electrical Fan Amps	Defrost Amps	Connections		Voltage
			L	W	H			Liquid	Suction	
E1HZ0052A	1	46	28	15	16	0.9	0	1/2	5/8	115/60/1
E1LZ0047B	1	47	28	15	16	0.45	4.4	1/2	5/8	208-230/60/1

Power Requirements	208-230/60/3 V
MCA =	19.75
MOP =	25

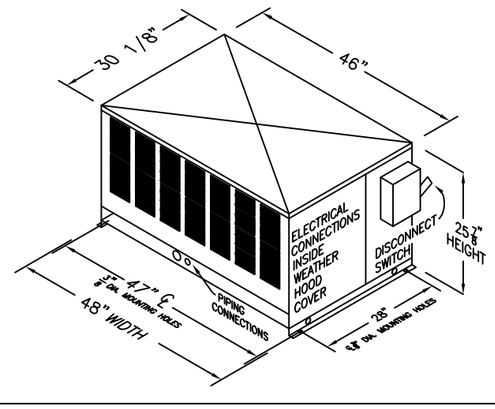

RSPR1104C

MASTER-BILT®
Refrigeration Solutions

GENERAL SPECIFICATIONS
MASTER-BILT DRS REMOTE REFRIGERATION PACKAGE

THE REMOTE REFRIGERATION SYSTEM SHALL BE PRE-ENGINEERED AND FACTORY ASSEMBLED.
THE ASSEMBLED UNIT TRADE NAME SHALL BE DRS AS MANUFACTURED BY:

MASTER-BILT
908 HIGHWAY 15 NORTH
NEW ALBANY, MS 38652
PHONE: (662) 534-9061
FAX: (662) 534-6049

CONTRACTORS SHALL FURNISH AND INSTALL AS SHOWN ON PLANS A MASTER-BILT REFRIGERATION, A ULAPPROVED AIR COOLED SYSTEM FOR REMOTE REFRIGERATION.

1-REFRIGERATION COMPRESSORS:

1.1 – AIR COOLED COMPRESSORS AND OR CONDENSING UNITS SHALL BE COPELANDø HERMETIC OR SCROLL TYPE. EACH UNIT SHALL BE EQUIPPED WITH HIGH / LOW DUAL PRESSURE CONTROL SYSTEM. LIQUID LINE DRIER, SIGHT GLASS, HEAD PRESSURE CONTROL AND CRANK CASE HEATERS WHERE APPLICABLE.
1.2 – ALL COMPRESSORS SHALL BE NEW AND FACTORY ASSEMBLED TO OPERATE THE REFRIGERANT SPECIFIED IN THE ENGINEERING SUMMARY SHEET. REFRIGERANT SHALL BE R-404A (SUVAø HP-62) FOR ALL HIGH, MEDIUM OR LOW TEMPERATURE SYSTEMS UNLESS OTHERWISE SPECIFIED BY THE CUSTOMER.

2 – PRE PIPING OF DRS SYSTEM:

2.1 – ALL REFRIGERANT LINES SHALL EXTEND TO ONE SIDE OF THE UNIT HOUSING IN A NEAT AND ORDERLY MANNER.
2.2 – ALL REFRIGERANT LINE TUBING SHALL BE SECURELY SUPPORTED AND ANCHORED WITH CLAMPS.
2.3 – ALL REFRIGERANT LINES SHALL BE COPPER TUBING WITH REFRIGERATION GRADE "A.C.R." OR TYPE "L".
2.4 – SILVER SOLDER SOR SIL-FOS () SHALL BE USED FOR ALL REFRIGERANT LINE PIPING. SOFT SOLDER IS NOT ACCEPTABLE.
2.5 – ALL PIPING TO BE PRESSURE TESTED WITH NITROGEN TO A MINIMUM OF 300 PSI AFTER CONDENSING UNIT AND / OR COIL HAS BEEN CONNECTED. THE BALANCE OF THE SYSTEM SHALL BE TESTED BY THE REFRIGERATION CONTRACTOR WITH ALL VALVES (SOLENOIDS, SHUTOFF OR OTHERWISE) IN THE OPEN POSITION.
2.6 – SUCTION LINES FOR MEDIUM AND LOW TEMPERATURE SYSTEM SHALL BE INSULATED WITH ARMAFLEXø OR SIMILAR INSULATION MATERIAL TO PREVENT CONDENSATION.

3 – CONTROL PANEL ON DRS SYSTEM

3.1 – THE REFRIGERATION SYSTEM SHALL HAVE A FACTORY MOUNTED AND PRE-WIRED CONTROL PANEL WITH A MAIN POWER DISCONNECT WITH INTER-LOCK SYSTEM OR SIMILAR SAFETY DEVICE.

3.2 – THE REFRIGERATION SYSTEM SHALL BE PROVIDED WITH COMPRESSOR AND CONTRACTORS AND / OR RELAYS AND TIME CLOCKS. ALL DEVICES SHALL BE WIRED TO A SINGLE POINT CONNECTION.

3.3 – THE REFRIGERATION SYSTEM POWER SHALL BE 208 – 230 VAC / 60 HZ / 3 (SEE ENGINEERING SCHEDULE)
3.4 – ELECTRICAL CONTRACTOR SHALL PROVIDE AND INSTALL MAIN POWER LINES TO THE SYSTEM'S ELECTRICAL PANEL AND PROVIDE THE NECESSARY CONNECTIONS WITH HARNESSES / CONDUITS WITH WIRING FOR CONTROL AND DEFROST HEATER LINES (WHERE REQUIRED) BETWEEN THE DEFROST CLOCK AND REFRIGERATED FIXTURES IN ACCORDANCE WITH THE WIRING DIAGRAM, NEC AND LOCAL CODES AND ORDINANCES.

4 – SAFETY CAUTION.

4.1 – EACH REFRIGERATION SYSTEM AS WELL AS EVAPORATOR COILS ARE SHIPPED UNDER NITROGEN PRESSURE. USE CAUTION AND EXERCISE CAUTION AND SAFETY AT ALL TIMES WHEN CONNECTION OR SERVICING ANY OF THESE SYSTEMS.

5 – EVAPORATOR COILS.

5.1 – EVAPORATOR COILS SHALL BE OF DIRECT EXPANSION AND FABRICATED OF COPPER TUBING WITH ALUMINUM FINS.
5.2 – ALL EVAPORATOR COILS SHALL BE PROVIDED WITH LIQUID LINE SOLENOID VALVES, THERMOSTATIC EXPANSION VALVE AND THERMOSTAT. WHEN APPLICABLE THE COILS WILL BE PIPED AND PRE-WIRED TO A JUNCTION BOX TO ALLOW FOR LINE PUMP DOWN -AFTER- THE EVAPORATION COIL. (SEE ENGINEERING SCHEDULE FOR SUPPLY CODES)

TRADE NOTES:

1 – GENERAL CONTRACTOR:
1.1 – CONTRACTORS SHALL VERIFY ALL DIMENSIONS AND COORDINATE WITH OTHER TRADES.
1.2 – GENERAL CONTRACTOR SHALL PREPARE AND WEATHER PROOF THE PLATFORM AND CURBED OPENINGS AS SHOWN.

2. – REFRIGERATION CONTRACTOR:
2.1 – ALL COPPER TUBING TO BE REFRIGERANT GRADE "A.C.R." OR TYPE "L".
2.2 – SILVER SOLDER AND / OR SIL-FOSø SHALL BE USED FOR ALL REFRIGERANT PIPING. SOLF SOLDER IS NOT ACCEPTABLE.
2.3 – ALL PIPING TO BE PRESSURE TESTED WITH NITROGEN AT 300 PSI MINIMUM AFTER CONDENSING UNIT, COMPRESSOR AND / OR COIL HAS BEEN CONNECTED. THE BALANCE OF THE SYSTEM SHALL BE PRESSURE TESTED WITH ALL VALVES (TXV, SUCTION SOLENOIDS AND / OR MANUAL SHUT-OFF VALVES OPEN.
2.4 – THE COMPLETED SYSTEM SHALL BE EVACUATED WITH VACUUM PUMP.
2.5 – THE SYSTEM, OR EACH INDIVIDUAL COMPRESSOR, CONDENSING UNIT SHALL BE CHARGED, TESTED AND ADJUSTED TO OPERATIONAL CONDITIONS.
2.6 – THE REFRIGERATION CONTRACTOR SHALL PROVIDE AND INSTALL DRAIN LINE HEATERS IN FREEZERS (WHERE APPLICABLE) IN ORDER TO BE CONNECTED BY THE ELECTRICAL CONTRACTOR.

3 – ELECTRICAL CONTRACTOR:
3.1 – ELECTRICAL CONTRACTOR TO PROVIDE POWER FOR THE REFRIGERATION SYSTEM AND CONNECT CONTROL AND DEFROST SYSTEMS (WHERE APPLICABLE) AS REFERENCED ON THE ENGINEERING SCHEDULE.
3.2 – ELECTRICAL CONTRACTOR TO PROVIDE 4 – 5 COLOR CODED WIRES (WHERE APPLICABLE) BETWEEN THE TIME CLOCK CIRCUITS AND THE REFRIGERATION COILS AND / OR FIXTURES FOR AUTOMATIC DEFROST SEQUENCING.
3.3 – ALL ELECTRICAL WIRING AND INSTALLATION SHALL BE DONE IN ACCORDANCE WITH THE WIRING DIAGRAM, NEC AND LOCAL CODES.

4 – PLUMBING CONTRACTOR:
4.1 – PLUMBING CONTRACTOR SHALL PROVIDE TYPE "M" COPPER DRAINS FOR ALL WALK-IN COOLERS AND / OR WALK-IN FREEZERS.
4.2 – ALL DRAINS TO HAVE A MINIMUM PITCH OF 1/2" PER 10 FOOT OF RUN IN FREEZERS, AND THE UNHEATED DRAIN MUST BE KEPT OUTSIDE OF THE ROOM TO PREVENT FREEZING.
4.3 – DRAIN P-TRAPS SHALL BE INSTALLED OUTSIDE OF THE REFRIGERATED AREA TO PREVENT THE INGRESS OF WARM / MOIST AIR
4.4 – CONTRACTOR TO PROVIDE INDIVIDUAL DRAIN LINES FOR EACH EVAPORATOR UNLESS OTHERWISE INDICATED ON THIS DOCUMENT.
4.5 – ALL PLUMBING SHALL BE DONE IN ACCORDANCE WITH LOCAL CODES.